Thiele Technologies

Tray and Carton Forming Packers

Nigrelli Courier SLI Series

Key Features

- End-loaded cartons or corrugated trays
- Accomodates a wide variety of package configurations, including 6, 8, 12, and 24 packs
- Capable of speeds to 40 cases per minute
- Specially designed lane dividers and stop plates to prevent damage to seals and labels
- Product/case present detectors stop operation when flow of either product or cartons is interrupted
- On demand operation
- Fully guarded drives with overload protection
- Low friction thermoplastic conveyor chains
- Hot melt glue system

barrywehmiller
bw
betterworld

Tray and Carton Forming Packers

Nigrelli Courier SLI Series

The Nigrelli Courier Series trayformer/cartoners are intermittent motion packaging systems to erect trays or cartons, and insert product in side-load configurations. The Courier Series includes three models: Model SL/C is a dedicated system designed for cartons; Model SL/TFP is designed for trays, and the Model SL/C/TFP is a combination machine, capable of handling both cartons and trays. Each system is custom engineered according to the customer's packaging requirements.

The Courier Series systems are available for 6, 8, 12 and 24 pack operations at speeds up to 40 cases per minute, depending on product characteristics. These systems will handle aluminum cans, composite cans, plastic bottles, glass bottles and aseptic packages. Product is supplied to the Courier on a customer-supplied conveyor in balanced and divided lanes. Lane dividers and stop plates are designed for specific products, to avoid contact with critical seals and to avoid damaging labels and trademarks.

The Nigrelli Courier employs two styles of load stations: servo driven rotary pusher bars, or pneumatically powered band cylinders. Loading into trays or cartons is accomplished by one of three methods: loading the group from one side, loading one half of the total group from both sides simultaneously, or loading alternately from both sides, which provides the gentle handling of product and utilizes lower linear speeds in transporting and packaging of product.

Additional Features

- Right or left hand operator station
- Dual product feed conveyors
- Tray or carton hopper
- Pneumatically operated carton feeder and expansion device
- Allen-Bradley Logix Series PLC

Available Options

- Dual product feed conveyors
- Right or left hand operator station
- Tray or carton hopper
- Pneumatically operated carton feed-er and expansion device
- Allen-Bradley Logix Series PLC
- Compression and discharge unit
- Product/carton low detectors
- Safety switches on all access guards
- Finished with Steel-It paint

Specifications

Electrical / Air Requirements	
Power	230/460VAC, 3 phase, 60 HZ
Control Voltage	120 volt or 24V DC
Air	80 psi
	Main line filter and locking shut off valve with bleeder provided

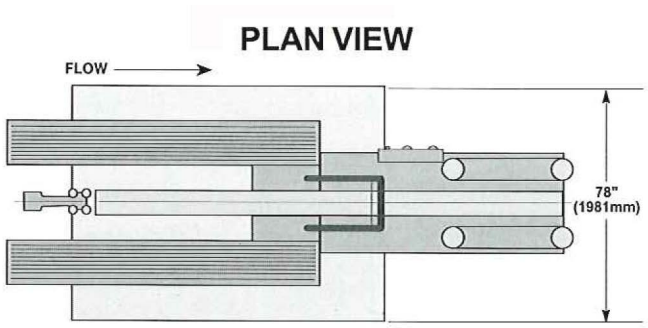

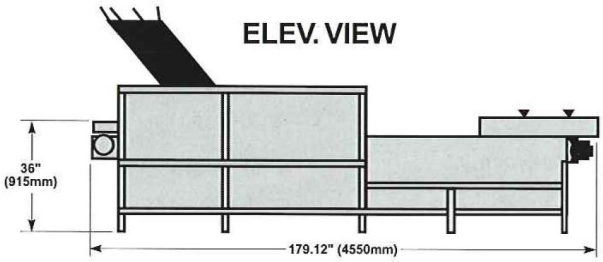

All sales are subject to our prevailing terms and conditions. Illustrations and specifications are subject to change without notice. Machines shown without guards are for illustrative purposes only. Guards are supplied and must be in place before operation.

Thiele Technologies

315 27th Avenue Northeast | Minneapolis, MN 55418 USA
+1 (612) 782-1200 | www.thieletech.com | sales@thieletech.com